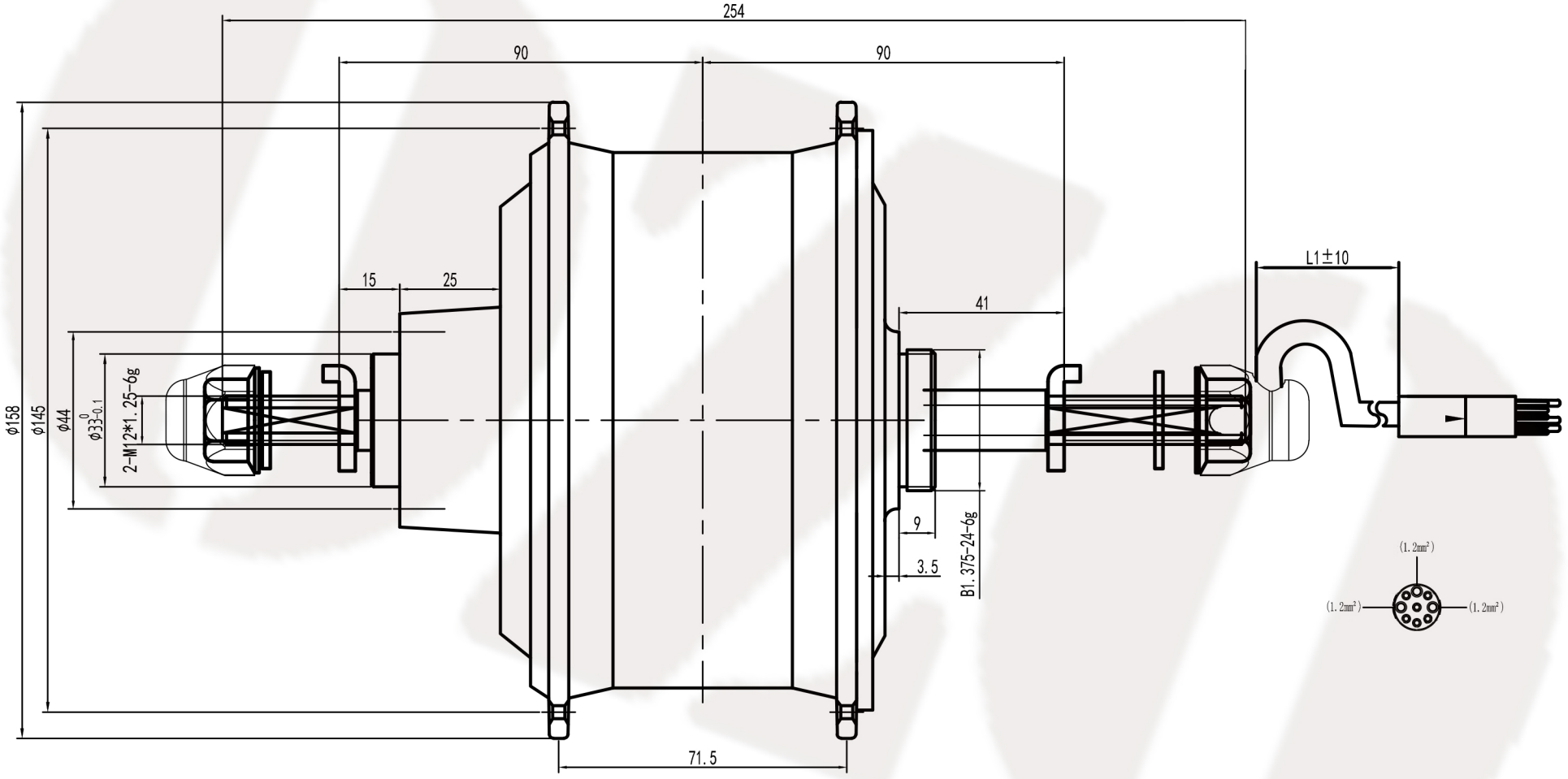
254
90
90
15
25
41
L1±10
φ158
φ145
φ44
φ33 0 -0.1
2-M12*1.25-6g
9
3.5
B1.375-24-6g
71.5
(1.2mm²)
(1.2mm²)
(1.2mm²)